Cambridge Assessment International Education

Cambridge International AS & A Level

CANDIDATE NAME	

CENTRE NUMBER						CANDIDATE NUMBER				

8537131121

PHYSICS **9702/31**

Paper 3 Advanced Practical Skills 1 **October/November 2020**

2 hours

You must answer on the question paper.

You will need: The materials and apparatus listed in the confidential instructions

INSTRUCTIONS

- Answer **all** questions.
- Use a black or dark blue pen. You may use an HB pencil for any diagrams or graphs.
- Write your name, centre number and candidate number in the boxes at the top of the page.
- Write your answer to each question in the space provided.
- Do **not** use an erasable pen or correction fluid.
- Do **not** write on any bar codes.
- You will be allowed to work with the apparatus for a maximum of 1 hour for each question.
- You should record all your observations in the spaces provided in the question paper as soon as these observations are made.
- You may use a calculator.
- You should show all your working and use appropriate units.

INFORMATION

- The total mark for this paper is 40.
- The number of marks for each question or part question is shown in brackets [ ].

For Examiner's Use	
1	
2	
Total	

This document has **12** pages. Blank pages are indicated.

© UCLES 2020

You may not need to use all of the materials provided.

1 In this experiment, you will investigate the equilibrium of a plastic cup.

(a) You have been provided with a cup attached to a string loop. A mass is attached to the cup as shown in Fig. 1.1.

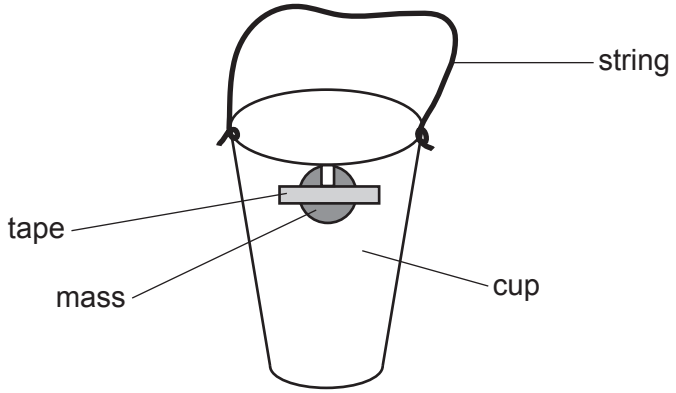

Fig. 1.1

- Set up the apparatus as shown in Fig. 1.2.

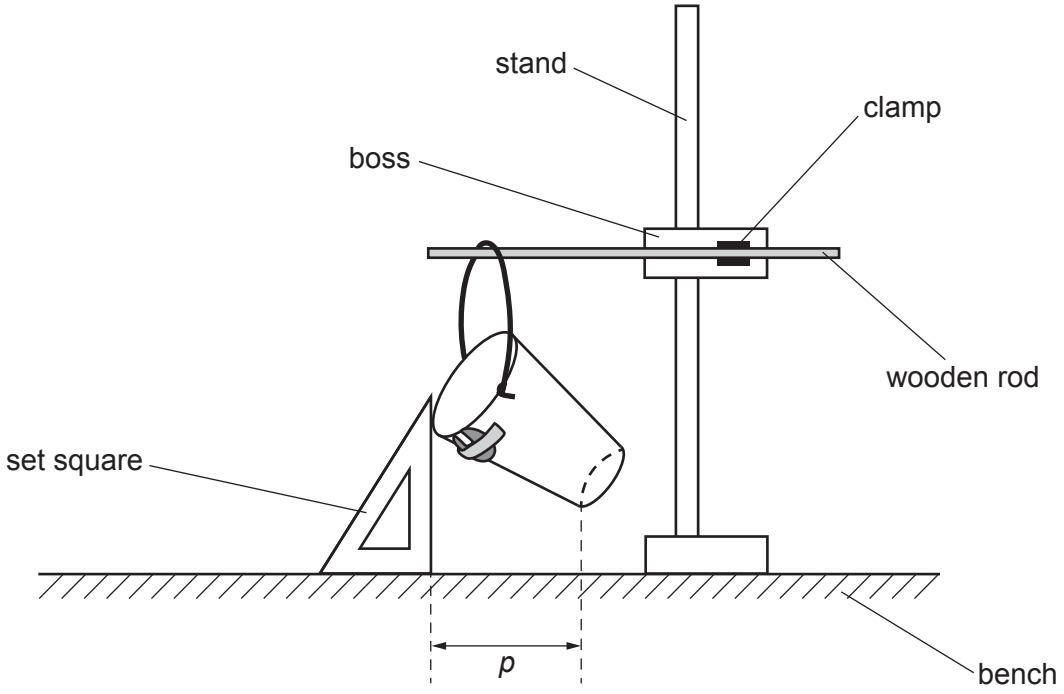

Fig. 1.2

- The horizontal distance between the edges of the cup is *p*, as shown in Fig. 1.2.

  Measure and record *p*.

p = ... [1]

(b) ● Pour approximately 12 cm^3 of water into the measuring cylinder.

● The mass of 1 cm^3 of water is 1 g.

Determine the mass of water in the measuring cylinder.

mass = ... g

● Gently pour this water from the measuring cylinder into the cup.

● Record the total mass *m* of water in the cup.

m = ... g

● Measure and record *p*.

p = ...
[1]

(c) Using the measuring cylinder, add water to the cup to increase m. Measure and record p. Repeat until you have six sets of values of m and p.

Record your results in a table. Include values of $\sqrt{m}$ and $\sqrt{p}$ in your table.

[10]

(d) (i) Plot a graph of $\sqrt{p}$ on the y-axis against $\sqrt{m}$ on the x-axis. [3]

(ii) Draw the straight line of best fit. [1]

(iii) Determine the gradient and y-intercept of this line.

gradient = ...

y-intercept = ...
[2]

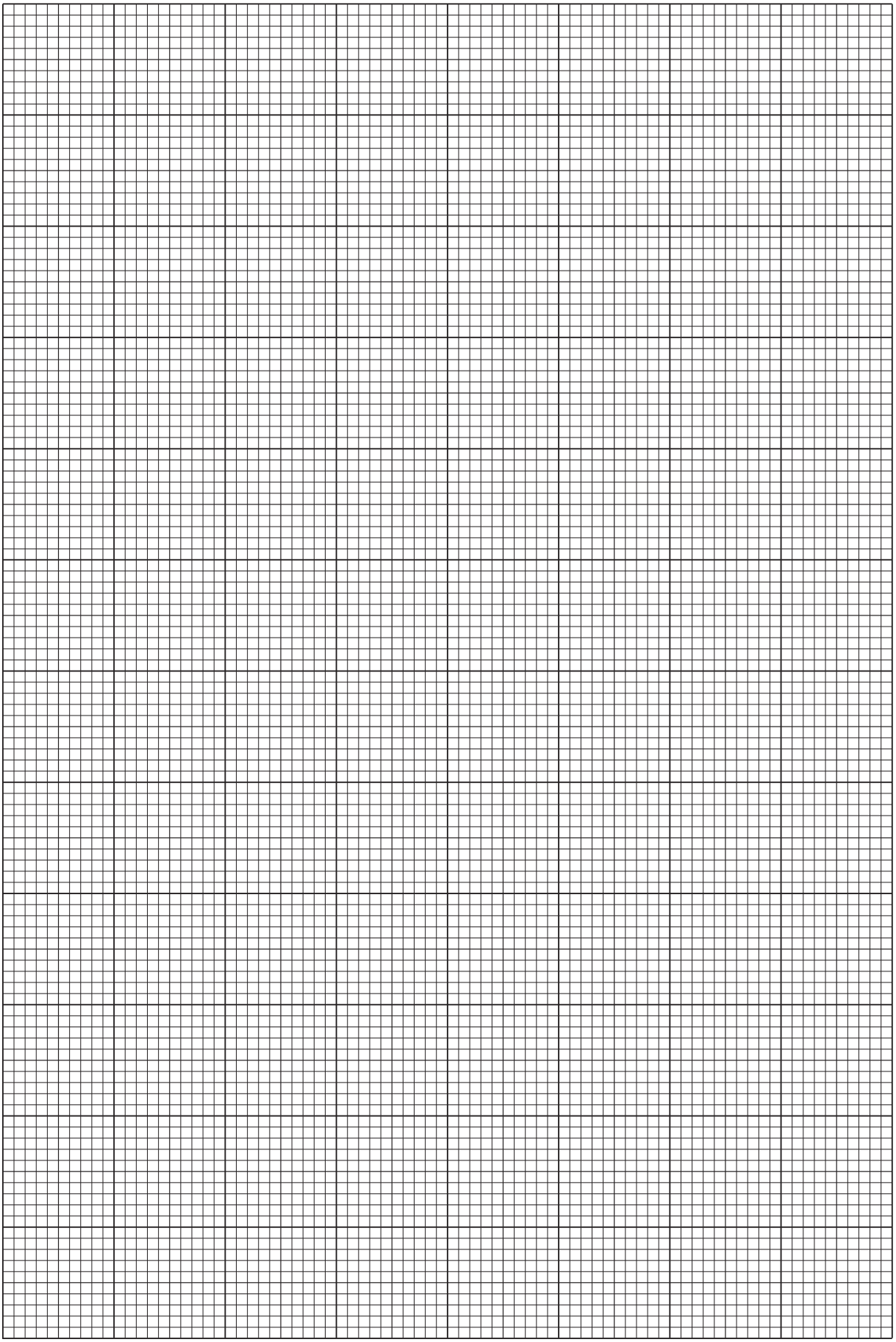

(e) It is suggested that the quantities p and m are related by the equation

$$\sqrt{p} = A\sqrt{m} + B$$

where A and B are constants.

Using your answers in **(d)(iii)**, determine the values of A and B.
Give appropriate units.

A = ...

B = ...
[2]

[Total: 20]

You may not need to use all of the materials provided.

2 In this experiment, you will investigate a cardboard shape falling down a wooden board.

(a) (i) You have been provided with a wooden board with nails attached.

- Set up the apparatus as shown in Fig. 2.1.

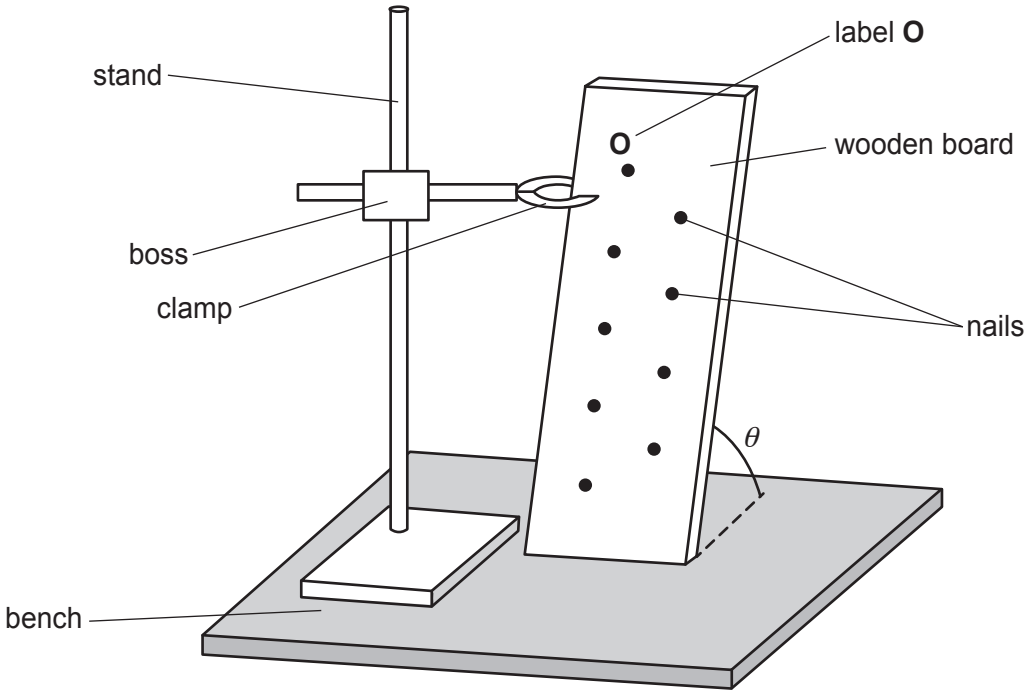

Fig. 2.1

- The angle between the wooden board and the bench is θ.

  Adjust the apparatus until θ is between 80° and 89°.

- Measure and record θ.

θ = ... ° [1]

(ii) Calculate sin θ.

sin θ = ... [1]

(iii) Justify the number of significant figures that you have given for your value of sin θ.

.....

.....

..... [1]

(b) (i) ● Firmly press the adhesive putty centrally onto the cardboard shape as shown in Fig. 2.2.

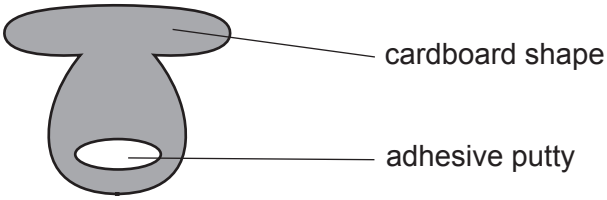

Fig. 2.2

● Flatten the adhesive putty so that it has a thickness of approximately 5 mm.

● Hold the cardboard shape centrally above the wooden board with the adhesive putty touching the board, as shown in Fig. 2.3.

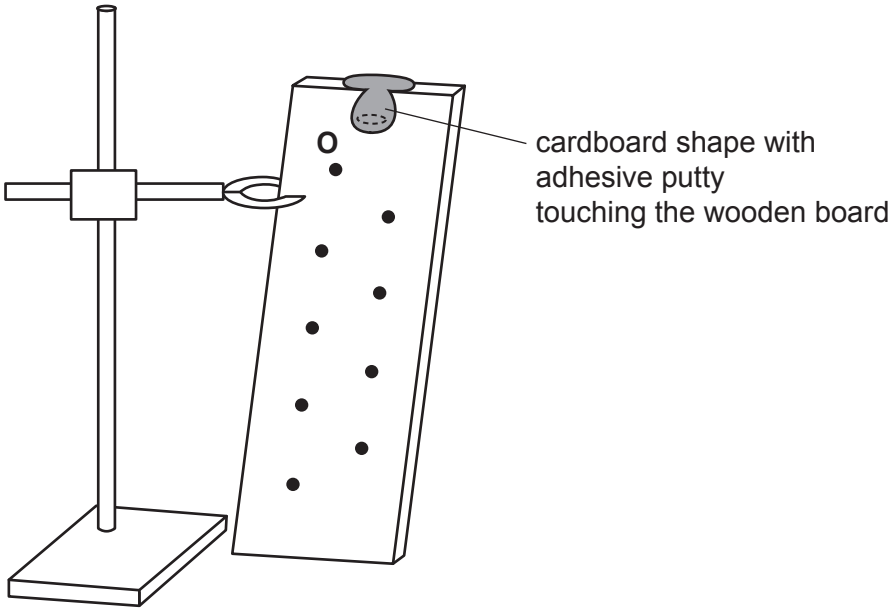

Fig. 2.3

● When the cardboard shape is released, it follows a path between the nails towards the bench.

The time between releasing the shape and the shape touching the bench is *t*.

Measure and record *t*.

t = ... s [2]

© UCLES 2020

(ii) Estimate the percentage uncertainty in your value of t. Show your working.

percentage uncertainty = ... [1]

(c) Adjust the apparatus and determine the **smallest** angle at which the shape will still fall to the bottom of the wooden board after release.

(i) ● Measure and record θ.

θ = ... °

● Calculate sin θ.

sin θ = ...
[2]

(ii) Measure and record t.

t = ... s [2]

(d) It is suggested that the relationship between θ and t is

$$\sin\theta = \frac{k}{t}$$

where k is a constant.

(i) Using your data, calculate two values of k.

first value of k = ...

second value of k = ...
[1]

(ii) Explain whether your results support the suggested relationship.

.....

.....

.....

..... [1]

(e) (i) Describe four sources of uncertainty or limitations of the procedure for this experiment.

1. .....

.....

2. .....

.....

3. .....

.....

4. .....

.....

[4]

(ii) Describe four improvements that could be made to this experiment. You may suggest the use of other apparatus or different procedures.

1. .....

.....

2. .....

.....

3. .....

.....

4. .....

.....

[4]

[Total: 20]

BLANK PAGE

Permission to reproduce items where third-party owned material protected by copyright is included has been sought and cleared where possible. Every reasonable effort has been made by the publisher (UCLES) to trace copyright holders, but if any items requiring clearance have unwittingly been included, the publisher will be pleased to make amends at the earliest possible opportunity.

To avoid the issue of disclosure of answer-related information to candidates, all copyright acknowledgements are reproduced online in the Cambridge Assessment International Education Copyright Acknowledgements Booklet. This is produced for each series of examinations and is freely available to download at www.cambridgeinternational.org after the live examination series.

Cambridge Assessment International Education is part of the Cambridge Assessment Group. Cambridge Assessment is the brand name of the University of Cambridge Local Examinations Syndicate (UCLES), which itself is a department of the University of Cambridge.

© UCLES 2020